MORNSUN®

SCM3425ASA High-speed CAN Transceiver

Features

- Compatible with the "ISO 11898" standard fully
- High-speed CAN, Support CANFD and data rates up to 5Mbps
- 5V power supply, 3.0-5.5V IO interface
- Receiver common mode input voltage : ±30V
- Bus Fault Protection : ±42V
- Transmit Data (TXD) Dominant Time-Out Function
- An unpowered node does not disturb the bus lines
- The bus supports maximum 110 nodes
- High Electromagnetic Immunity
- Meet AEC-Q100 automobile standard

Package

Product optional package: SOP-8, Screen Printing information please see "Order Information"

Applications

- Industrial automation
- Building automation
- Smart meter
- Long-distance signal interaction and transmission

Functional Description

The SCM3425ASA is an interface chip used between the CAN protocol controller and the physical bus. It can be used in many fields such as trucks, buses, cars, industrial control. It can reach speeds up to 5Mbps. The SCM3425ASA has the ability to differentially transmit between the bus and the CAN protocol controller.

Typical Application

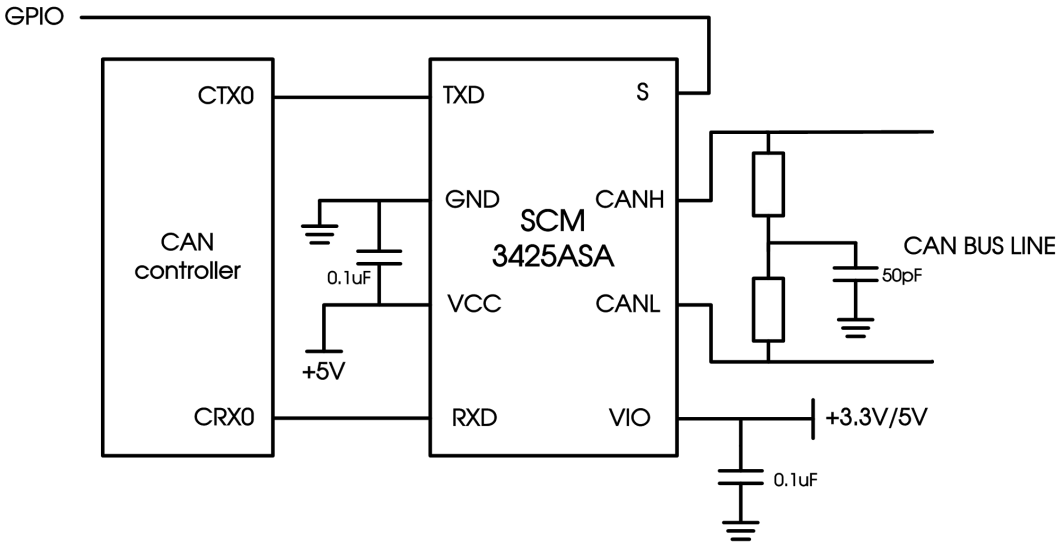

Note: GPIO means universal I/O port.

MORNSUN Guangzhou Science & Technology Co., Ltd. reserves the copyright and right of final interpretation

Contents

Feature and Package....1
Applications....1
Functional Description....1
Typical Application....1
Pin Package....2
Truth Table....2
Pin Configurations and Functions....3
Absolute Maximum Ratings....3
Recommended Operating Conditions....3
Electrical Characteristics....3
Switching Characteristics....4
Other Characteristics....5
Parameter Test Circuit....5
General Description....8
Design Circuit Expansion....9
Power Usage Recommendations....9
Ordering Information....9
Package Information....10
Tape & Reel Information....11

Pin Package

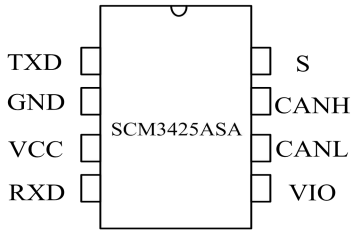

Truth Table

TABLE 1 CAN Transceiver Truth Table

VCC	TXD	S	CANH	CANL	BUS STATE	RXD
4.5 to 5.5V	L	L(Or left floating)	H	L	Dominant	L
4.5 to 5.5V	H(Or left floating)	X	$0.5V_{CC}$	$0.5V_{CC}$	Recessive	H
4.5 to 5.5V	X	H	$0.5V_{CC}$	$0.5V_{CC}$	Recessive	H
$0<V_{CC}<4.75V$	X	X	$0V<V_{CANH}<V_{CC}$	$0V<V_{CANL}<V_{CC}$	Recessive	X

(1)H=High-level ; L=Low-level ; Z=high resistance ; X=Any level

TABLE 2 Device function table

INPUTS		OUTPUTS		Bus State
TXD	S	CANH	CANL	
L	L(or left floating)	H	L	Dominate
H (Or left floating)	L(or left floating)	Z	Z	Recessive
X	H	Z	Z	Recessive

(2)H=High-level ; L=Low-level ; X=Any level

TABLE 3 Receiver function table

V_{ID}=CANH-CANL	RXD	Bus State
$V_{ID}\geq0.9V$	L	Dominate
$0.4< V_{ID}<0.9V$	?	?
$V_{ID}\leq0.4V$	H	Recessive
Open	H	Recessive

(3)H=High-level ; L=Low-level; ？=indeterminacy

Pin Configurations and Functions

Pins	Name	Pin Functions
1	TXD	Transmit data input
2	GND	Ground
3	V_{CC}	Supply voltage
4	RXD	Receive data output

MORNSUN Guangzhou Science & Technology Co., Ltd. reserves the copyright and right of final interpretation

5	V_{IO}	Transceiver I/O level shifting supply voltage
6	CANL	Low level CAN bus input line
7	CANH	High level CAN bus input line
8	S	Silent mode and high-speed mode (Low is high-speed)

Absolute Maximum Ratings

Sym.	Parameters	Value.	Unit.
V_{CC}	Supply Voltage	-0.3 to +7	V
V_{IO}	Transceiver I/O level shifting supply voltage	-0.3 to +7	V
TXD , RXD , S	Logic Input/Ouput terminal voltage	-0.3 to +7	V
CANL , CANH	Bus Side Input Voltage	-42 to 42	V
Tstg	Storage Temperature Range	-65 to 150	℃
Tamb	Operating Ambient Temperature Range	-40 to 125	℃
Tj(max)	Work junction temperature	-40 to 150	℃

The maximum limit parameter value means that exceeding these values may cause irreparable damage to the device. Under these conditions, it is not conducive to the normal operation of the device. Continuous operation of the device at the maximum allowable rating may affect device reliability. The reference point for all voltages is ground.

Recommended Operating Conditions

Sym.	Parameters	Test Conditions	Min.	Max.	Units
Vcc	Supply Voltage		4.5	5.5	V
V_{IO}	Transceiver I/O level shifting supply voltage		3.0	5.5	V
1/tbit	Maximum Baud Rate	Non-return to zero code	5		Mbaud
V_{BUS}	Bus pin withstand voltage		-42	+42	V
V_{diff}	BUS Differential Output Voltage		1.5	3.0	V
Tamb	Operating Ambient Temperature Range		-40	125	℃

Electrical Characteristics

Unless otherwise stated, V_{CC}=5V±5%, V_{IO} = 3.0 V to 5.5 V T_{emp}=T_{MIN} to T_{MAX}, typical value is V_{CC}=+5V, T_{emp}=25°C

Driver Electrical Characteristics						
Sym.	**Parameters**	**Test Conditions**	**Min.**	**Typ**	**Max.**	**Units**
V_{IH}	High-level input voltage	TXD	0.7V_{IO}			V
V_{IL}	Low-level input voltage	TXD			0.3V_{IO}	V
I_{IH}	High-level input leakage current	TXD, S = V_{CC} or V_{IO} = 5.5 V	-2.5	0	1	uA
I_{IL}	Low-level input leakage current	TXD, S = 0 V, V_{CC} = V_{IO} = 5.5 V	-100	-63	-7	uA
$I_{lkg(OFF)}$	Unpowered leakage current	TXD, TXD = 5.5 V, V_{CC} = V_{IO} = 0 V	-1	0	1	uA
C_I	Input capacitance	V_{IN} = 0.4 * sin(4E6 * π * t) + 2.5 V		4.5		pF
$V_{OH(D)}$	CANH output voltage(dominant)	TXD=0V, S=0V, R_L=60Ω Figure 1, Figure 2	2.75		4.5	V
$V_{OL(D)}$	CANL output voltage(dominant)	TXD=0V, S=0V, R_L=60Ω Figure 1, Figure 2	0.5		2.25	V
$V_{O(R)}$	Bus Output voltage(recessive)	TXD=V_{CC}, S=0V, RL=OPEN Figure 1, Figure 2	2	0.5V_{CC}	3	V
$V_{OD(D)}$	Bus differential output voltage (dominant)	TXD=0V, S=0V, 45Ω≤R_L < 50Ω, Figure 1, Figure 2	1.4		3	V
		TXD=0V, S=0V, 50Ω≤R_L≤65Ω , Figure 1, Figure 2	1.5		3	V
		TXD=0V, S=0V, R_L=2240Ω , Figure 1, Figure 2	1.5		5	V
$V_{OD(R)}$	Differential output voltage(recessive)	TXD=V_{CC}, S=0V , R_L=60Ω , Figure 1, Figure 2	-0.12		0.012	V
		TXD=Vcc, S=0V, NO LOAD	-0.05		0.05	V
$V_{dom(TX)sym}$	Dominant output voltage symmetry	$V_{dom(TX)sym}$=V_{CC}- V_{CANH} - V_{CANL}	-1	0.2	1	V
V_{TXsym}	Output voltage symmetry	V_{TXsym}= (V_{CANH} + V_{CANL})/V_{CC}		1		V/V
V_{OC}	Common-mode output voltage	S=0V, Figure 8	2	2.5	3	V

MORNSUN Guangzhou Science & Technology Co., Ltd. reserves the copyright and right of final interpretation

I_{OS}	Short-circuit output current	S=0V, V_{CANL}=-5V to 40V, CANH=open, TXD=0V Figure 11	-100			mA
		S=0V, V_{CANL}=-5V to 40V, CANH=open, TXD=0V Figure 11			100	
$I_{O(R)}$	Output current(recessive)	-27V<VBUS<32V, V_{BUS}=CANH=CANL, TXD=V_{CC}	-5		5	mA

Receiver Electrical Characteristics

Sym.	Parameters	Test Conditions	Min.	Typ	Max.	Units
V_{IT+}	Positive-going input threshold voltage	S=0V, -20V≤V_{CM}≤20V, Figure5			900	mV
V_{IT-}	Negative-going input threshold voltage		400			
V_{IT+}	Positive-going input threshold voltage	S=0V, -30V≤V_{CM}≤30V, Figure5			1000	
V_{IT-}	Negative-going input threshold voltage		400			
V_{HYS}	Hysteresis voltage (V_{IT+} - V_{IT-})			115		
V_{OH}	High-level output voltage	IO=-2mA, Figure6	0.8V_{IO}			V
V_{OL}	Low-level output voltage	IO=2mA, Figure6			0.2V_{IO}	V
$I_{(OFF)}$	Unpowered input current	CANH or CANL=5V, Other pin=0V	-1	0	1	uA
C_I	Input capacitance to ground (CANH or CANL)			27		pF
C_{ID}	Differential input capacitance			14		pF
R_{IN}	Input resistance (CANH or CANL)	TXD=V_{CC}=V_{IO}=5V,S=0V,-30V≤Vcm≤+30V	15		40	kΩ
R_{ID}	Differential input resistance		30		80	kΩ
RI_{match}	Input resistance matching: [1 – R_{IN}(CANH) / R_{IN}(CANL)] × 100%	CANH=CANL	-2%		2%	
V_{COM}	Common mode range		-30		30	V

Power Supply Features

Sym.	Parameters	Test Conditions	Min.	Typ	Max.	Units
I_{CC}	Silent mode power dissipation	S=V_{CC}, TXD=V_{CC}		1.3	2.5	mA
	Dominant power dissipation	TXD=0V, S=0V, LOAD=60Ω		50	70	mA
		TXD=0V, S=0V, LOAD=50Ω		52	80	mA
	Recessive power dissipation	TXD=V_{CC}, S=0V, NO LOAD		1.3	2.5	mA
I_{IO}	Normal and Silent modes	RXD, TXD=S=0 or V_{IO}		73	300	uA
UV_{VCC}	Rising undervoltage detection on Vcc for protected mode			4.0	4.4	V
	Falling undervoltage detection on Vcc for protected mode		3.6	3.9	4.15	V
$V_{HYS(UVVCC)}$	Hysteresis voltage on Vcc for protected mode			200		mV
UV_{VIO}	Rising undervoltage detection on V_{IO} for protected mode		1.3		2.75	V
$V_{HYS(UVVIO)}$	Hysteresis voltage on V_{IO} for protected mode			150		mV

S-pin Characteristics

Sym.	Parameters	Test Conditions	Min.	Typ	Max.	Units
V_{IH}	High-level input voltage		0.7V_{IO}			V
V_{IL}	Low-level input voltage				0.3V_{IO}	V
I_{IH}	High-level leakage current	S = V_{CC} or V_{IO} = 5.5 V			30	uA
I_{IL}	Low-level leakage current	S = 0 V, V_{CC} = V_{IO} = 5.5 V	-2	0	2	uA
$I_{lkg(OFF)}$	Unpowered leakage current	S = 5.5 V, V_{CC} = V_{IO} = 0 V	-1	0	1	uA

Switching Characteristics

Unless otherwise stated, V_{CC}=5V±5%, V_{IO} = 3.0 V to 5.5 V T_{emp}=T_{MIN} to T_{MAX}, typical value is V_{CC}=+5V, T_{emp}=25°C

Driver Switching Characteristics

Sym.	Parameters	Test Conditions	Min.	Typ	Max.	Units
t_{PLH}	Driver propagation delay(L to H)	S=0V, Figure4		70		ns
t_{PHL}	Driver propagation delay(H to L)			42		ns
t_r	Driver differential-output rise time			45		ns
t_f	Driver differential-output fall time			45		ns
t_{dom}	Dominant time-out time	Figure10	1.2		3.8	ms

MORNSUN Guangzhou Science & Technology Co., Ltd. reserves the copyright and right of final interpretation

Receiver Switching Characteristics						
Sym.	**Parameters**	**Test Conditions**	**Min.**	**Typ**	**Max.**	**Units**
t_{PLH}	Receiver propagation delay(L to H)	S=0V , Figure6		78		ns
t_{PHL}	Receiver propagation delay(H to L)			59		ns
t_r	Receiver output rise time			10		ns
t_f	Receiver output fall time			10		ns
Device Switching Characteristics						
Sym.	**Parameters**	**Test Conditions**	**Min.**	**Typ**	**Max.**	**Units**
$T_{d(LOOP1)}$	Total loop delay1, driver input (TXD) to receiver output (RXD), recessive to dominant	Figure9, S=0V		100	160	ns
$T_{d(LOOP2)}$	Total loop delay2, driver input (TXD) to receiver output (RXD),dominant to recessive			110	175	ns
T_{MODE}	Mode conversion time			0.15	10	us

Other Characteristics

Unless otherwise stated, V_{CC}=5V±5%, V_{IO} = 3.0 V to 5.5 V T_{emp}=T_{MIN} toT_{MAX}, typical value is V_{CC}=+5V, T_{emp}=25°C

TXD Characteristics						
Sym.	**Parameters**	**Test Conditions**	**Min.**	**Typ**	**Max.**	**Units**
$I_{IH(TXD)}$	TXD Pin High-level input current	S=V_{CC} or V_{IO}=5.5V	-2.5	0	1	uA
$I_{IL(TXD)}$	TXD Pin Low-level input current	S=0V , V_{CC}=V_{IO}=5.5V	-100	-63	-7	uA
$I_{O(off)}$	V_{CC}=0V, Current of TXD	V_{CC}=0V, TXD=5V	-1	0	1	uA
V_{IH}	High-level input voltage		0.7V_{IO}			V
V_{IL}	Low-level input voltage				0.3V_{IO}	V
C_I	Input capacitance			4.5		pF
TXDO	TXD port suspension voltage			H		logic

Parameter Test Circuit

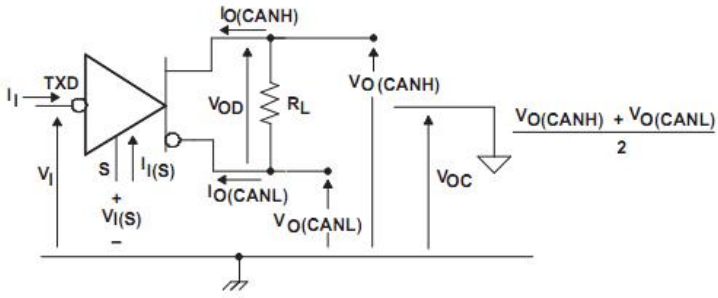

Figure 1. Driver Voltage, Current Test Definition

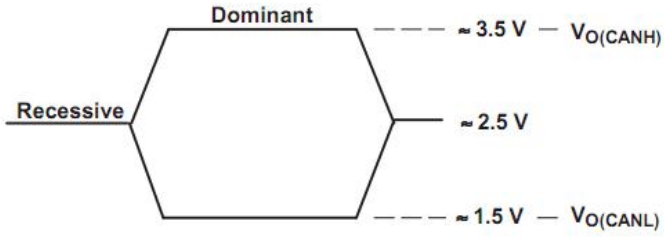

Figure 2. Bus Logic Voltage Definition

MORNSUN Guangzhou Science & Technology Co., Ltd. reserves the copyright and right of final interpretation

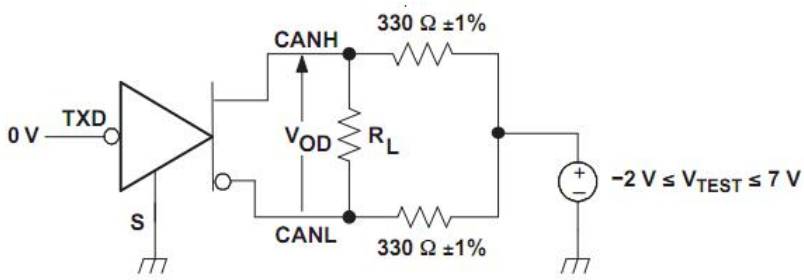

Figure 3. Driver VOD Test Circuit

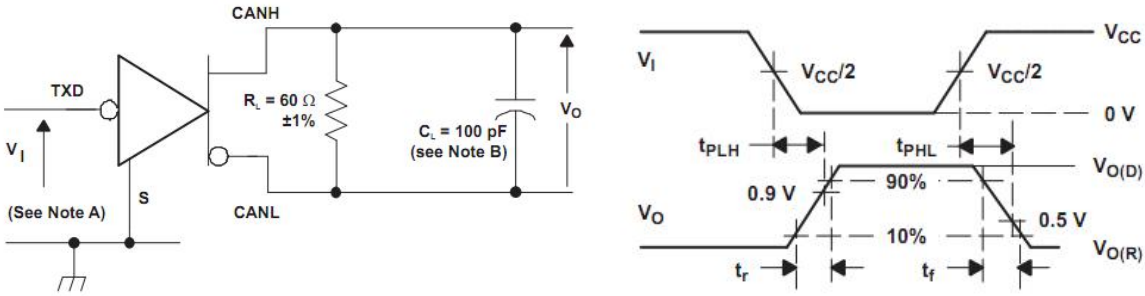

Figure 4. Driver Test Circuit and Voltage Waveforms

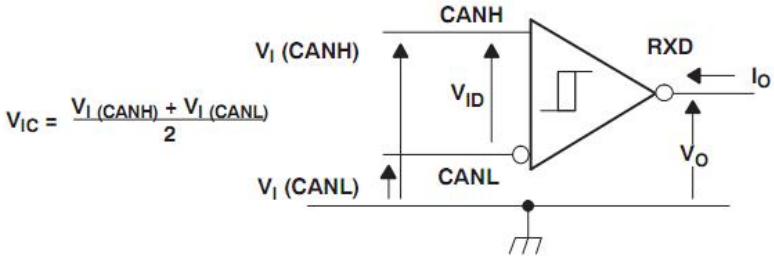

Figure 5. Receiver Voltage and Current Definition

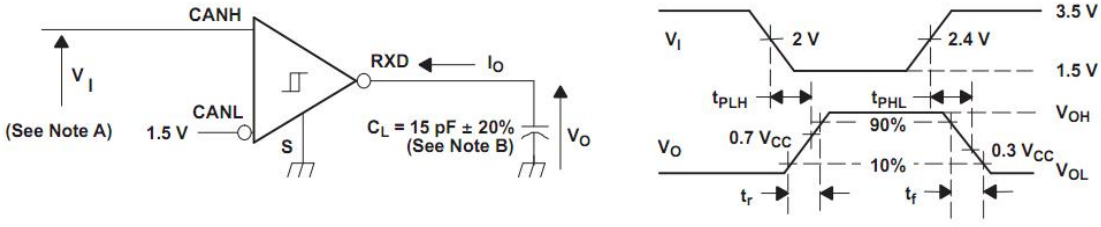

A. Input pulse generator characteristics: PRR≤125kHz, duty cycle = 50%, t_r<6ns, t_f<6ns, Zo = 50Ω

B. C_L includes instrument and fixed capacitor, the error is within 20%.

Figure 6. Receiver Test Circuit and Voltage Waveforms

MORNSUN Guangzhou Science & Technology Co., Ltd. reserves the copyright and right of final interpretation

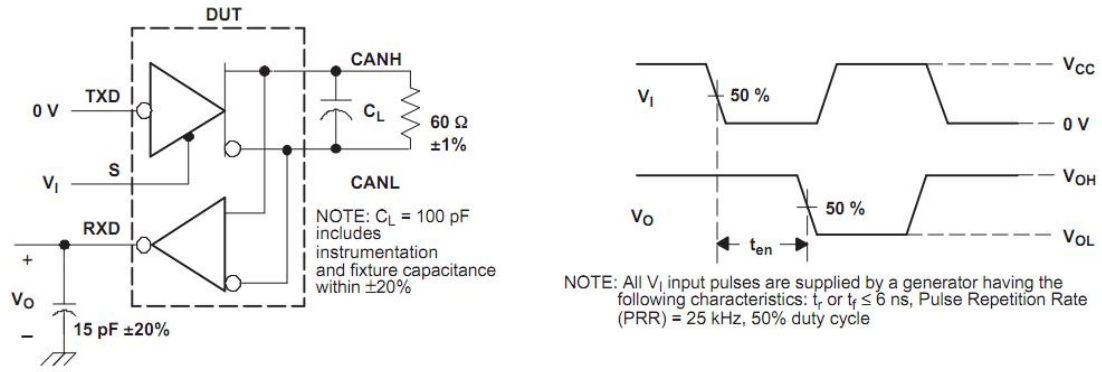

Figure 7. TEN Test Circuit and Voltage Waveforms

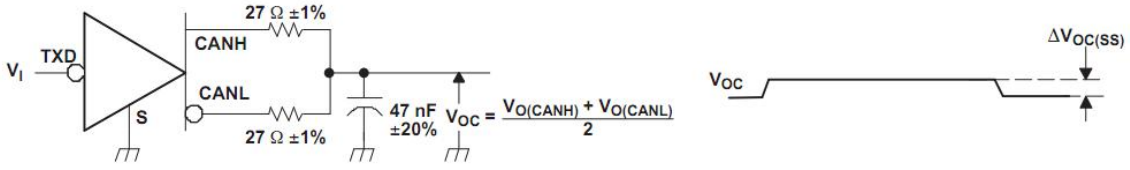

NOTE: VI from0-V_{CC} input pulse generator features: PRR≤125kHZ 50% duty cycle tr<6ns tf<6ns Zo=50Ω

Figure 8. Common Mode Output Voltage Test and Waveforms

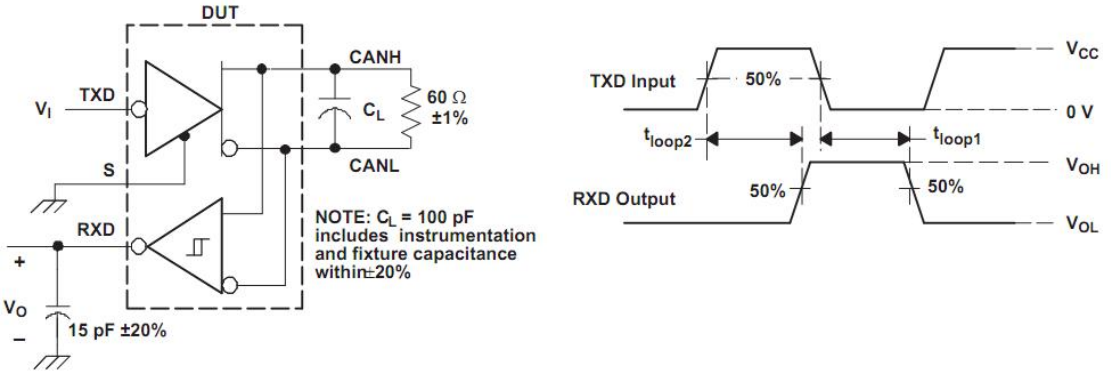

Figure 9. t(LOOP) Test Circuit and Waveforms

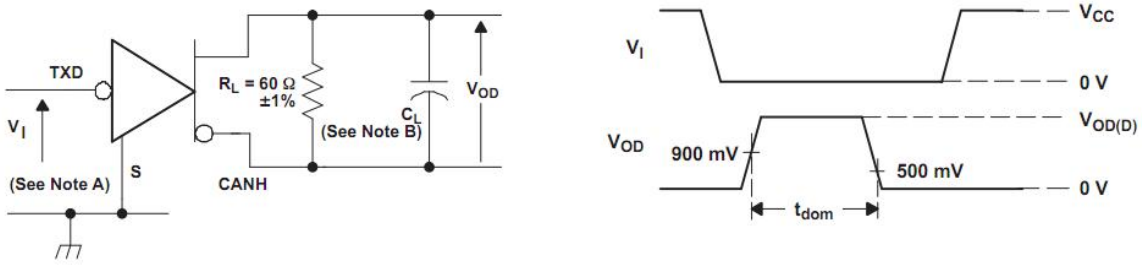

Figure 10. Dominant Time-out Test Circuit and Waveforms

MORNSUN Guangzhou Science & Technology Co., Ltd. reserves the copyright and right of final interpretation

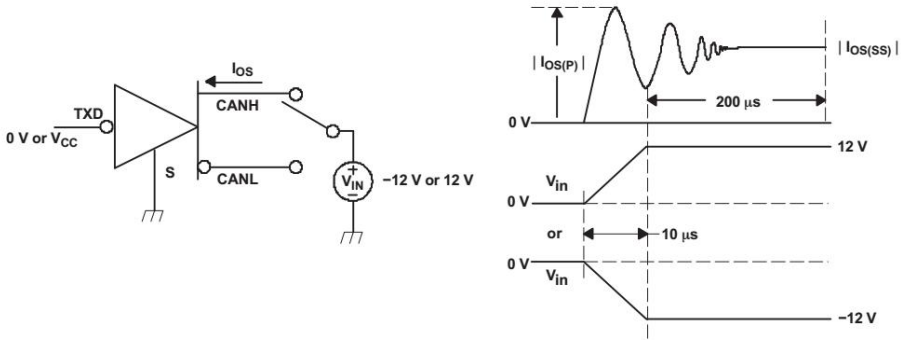

Figure 11. The Driver Short-circuit Current Test Circuit and Waveforms

General Description

The SCM3425ASA is an interface chip used between the CAN protocol controller and the physical bus. It can be used in many fields such as trucks, buses, cars, industrial control. It can reach speeds up to 5Mbps. The SCM3425ASA has the ability to differentially transmit between the bus and the CAN protocol controller. SCM3425ASA is compatible with the "ISO 11898" standard.

Short-circuit protection: The drive stage of the SCM3425ASA has current-limiting protection to prevent the drive circuit from short-circuiting to positive and negative supply voltages. The power dissipation increases when a short circuit occurs. The short-circuit protection function protects the driver stage from damage.

Over-temperature protection: The SCM3425ASA has over-temperature protection. When the junction temperature exceeds 160°C, the current in the driver stage will decrease. Because the drive tube is the primary energy consuming component, current reduction can reduce power consumption and reduce chip temperature. At the same time, the rest of the chip remains functional.

Dominant time-out function: If the pin TXD is forced to a permanent low level due to a hardware or software application failure, the built-in TXD dominant timeout timer circuit prevents the bus line from being driven to a permanent dominant state (blocking all network traffic). The timer is triggered by the negative edge on pin TXD. If the low level on pin TXD lasts longer than the internal timer value (tdom), the transmitter will be disabled and the drive bus will enter a recessive state. The timer is reset by the positive edge on pin TXD.

Control mode: Control pin S allows two operating modes to be selected: high speed mode or silent mode.

The high speed mode is the normal operating mode and is selected by grounding the pin S. If pin S is not connected, it is the default mode. However, to ensure EMI performance in applications that only use high speed mode, it is recommended to ground pin S.

In silent mode, the transmitter is disabled. All other IC functions continue to run. The silent mode is selected by connecting pin S to V_{CC} and can be used to prevent network communication congestion due to out of control of the CAN controller.

MORNSUN Guangzhou Science & Technology Co., Ltd. reserves the copyright and right of final interpretation

Design Circuit Expansion

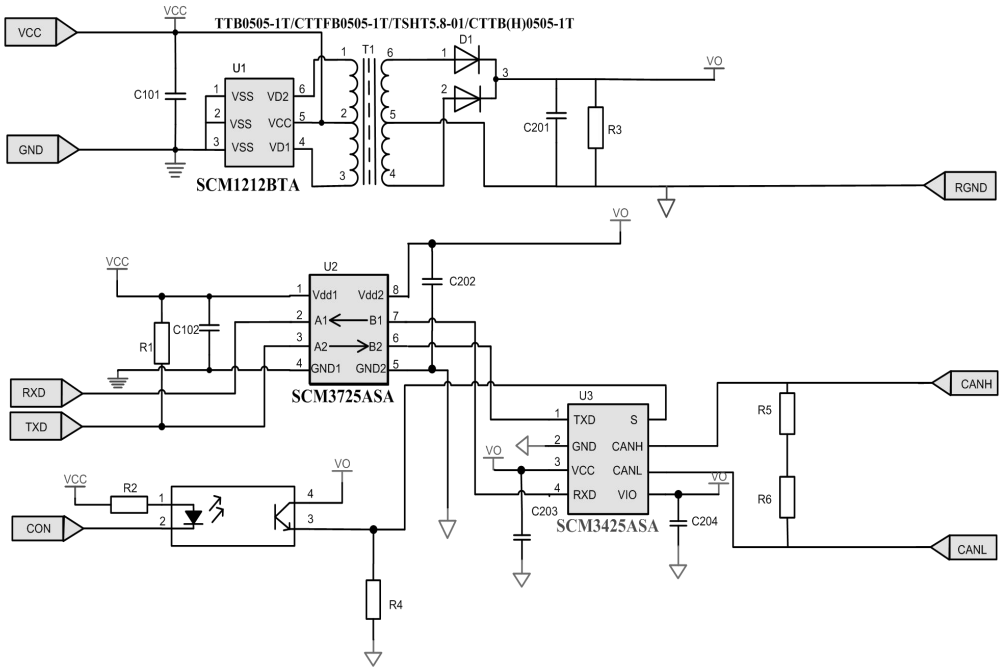

Figure 12.Isolated Application Circuit Schematic for Converting TTL/CMOS to CAN Bus

Power Usage Recommendations

Connecting the 0.1μF bypass capacitor as close as possible to the V_{CC} pin of the device.

Ordering Information

Product number	Package Type	Pins	Screen Printing
SCM3425ASA	SOP	8	3425ASA YM

Product model and Screen Printing instructions:

3425XYZ:

(1)3425, Product Code.

(2)X = A-Z, Version code.

(3)Y = S Package code; S: SOP package; F: DFN package;

(4)Z = C, I, A, M, Temperature class code; C: 0℃ - 70℃,I: -40℃ - 85 ℃, A: -40℃ - 125℃, M: -55℃ - 125℃.

(5)YM: Product traceability code; Y: Product year code, M: Product production month code.

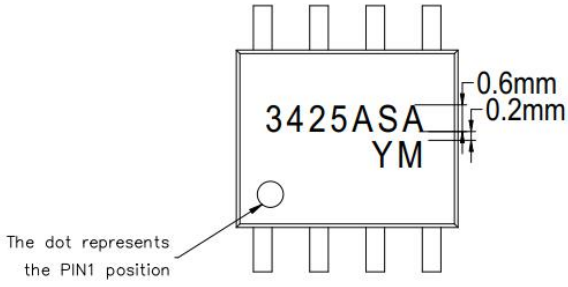

Note:
1、Typeface: Arial;
2、Character size:
Height: 0.6mm, Spacing: 0.1mm, LineSpacing: 0.2mm;

MORNSUN Guangzhou Science & Technology Co., Ltd. reserves the copyright and right of final interpretation

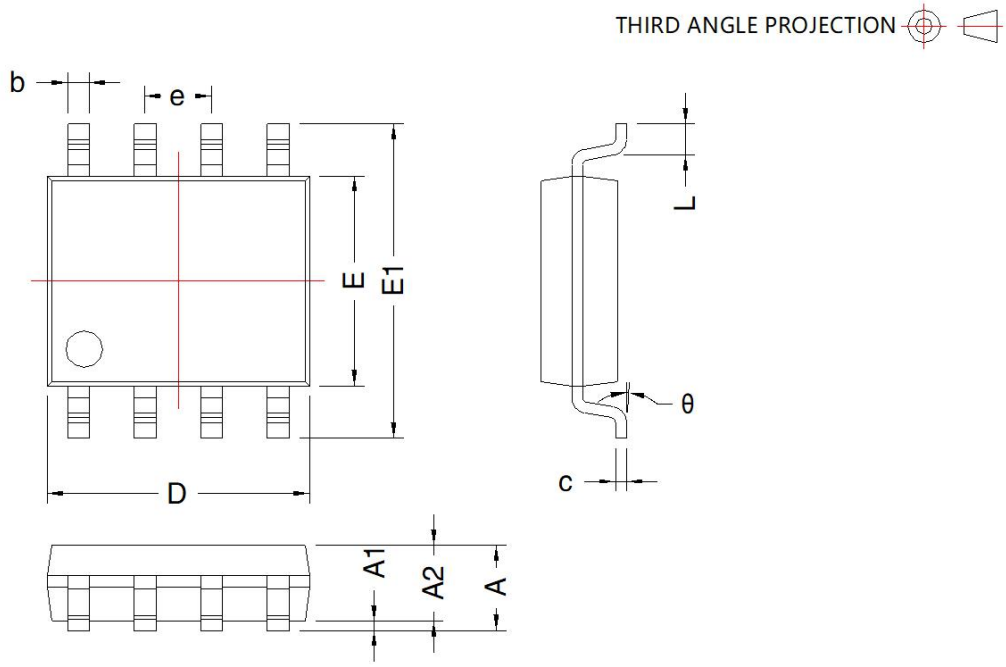

SOP-8				
Mark	Dimension(mm)		Dimension(inch)	
	Min	Max	Min	Max
A	1.40	1.80	0.055	0.071
A1	0.05	0.25	0.002	0.010
A2	1.35	1.55	0.053	0.061
D	4.80	5.00	0.189	0.197
E	3.80	4.00	0.150	0.157
E1	5.80	6.20	0.228	0.244
L	0.45	1.00	0.018	0.39
b	0.30	0.50	0.012	0.020
e	1.27BSC		0.05BSC	
c	0.153	0.253	0.006	0.010
θ	2°	6°	2°	6°

MORNSUN Guangzhou Science & Technology Co., Ltd. reserves the copyright and right of final interpretation

Tape & Reel Information

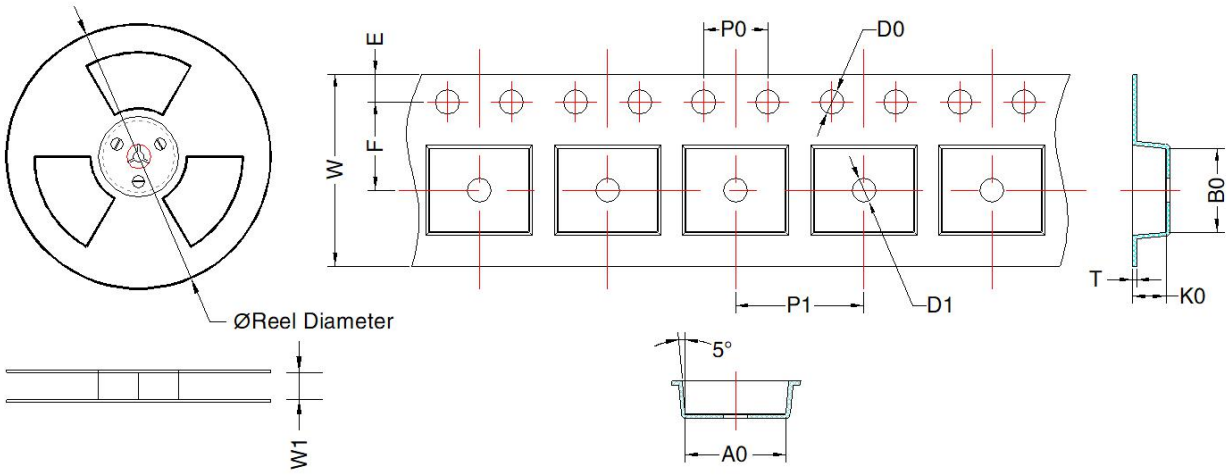

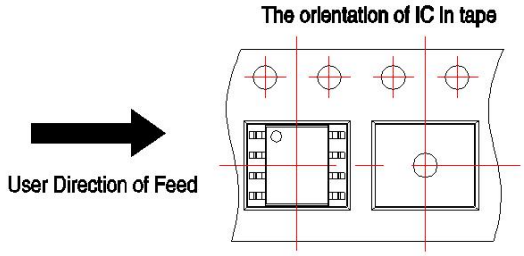

Device	Package Type	MPQ	Reel Diameter (mm)	Reel Width W1 (mm)	A0 (mm)	B0 (mm)	K0 (mm)	T (mm)	W (mm)	E (mm)	F (mm)	P1 (mm)	P0 (mm)	D0 (mm)	D1 (mm)
SCM3425ASA	SOP-8	3000	330.0	12.4	6.5 ± 0.2	5.45 ± 0.2	2.0 ± 0.2	0.3 ± 0.05	12.0 ± 0.3	1.75 ± 0.1	5.5 ± 0.1	8.0 ± 0.1	4 ± 0.1	1.5 ± 0.1	1.5 ± 0.1

MORNSUN Guangzhou Science & Technology Co., Ltd.

Address: No. 8 Nanyun 4th Road, Huangpu District, Guangzhou, China

Tel: 86-20-38601850 Fax: 86-20-38601272 E-mail: info@mornsun.cn www.mornsun-power.com

MORNSUN Guangzhou Science & Technology Co., Ltd. reserves the copyright and right of final interpretation